Connector for electronic connections
Explosion proof - Atex

P992221

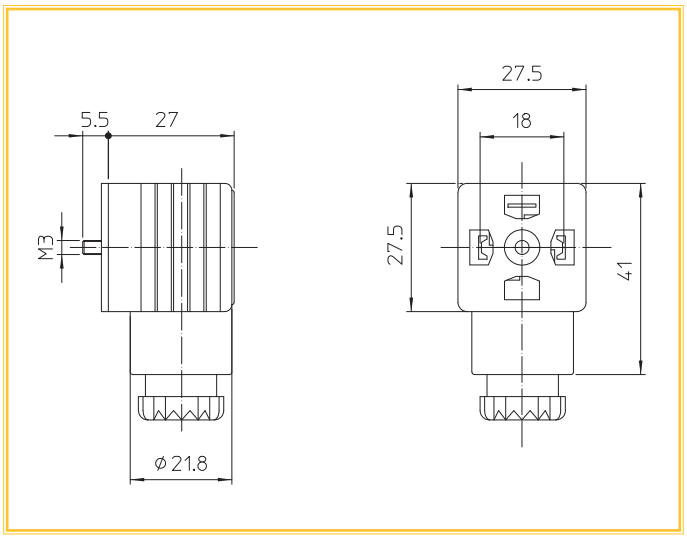

COMPATIBLE COILS:

BD.. - GD.. - UD..

SPARE PARTS:

Standard:	**EN 175301-803** paragraph 5.3.1
Number of contacts:	2 + ⏚
Supply voltage:	max 250V
Operating current:	10 A
Max current:	16 A
Max conductor section:	1,5 mm^2
Housing :	PA (Polyamide)
Cable entry:	Pg 09 - Pg 11
Cable diameter:	6÷11 mm
Protection class:	IP 65/67 EN 60529
Sealing:	VMQ -20°C + 80°C

According to Directive 2014/34/EU ATEX

II 2G IIC T6 Gb
II 2D Ex tb IIIC T85°C Db IP65/67

The “ODE” reserves the right to carry out and aesthetic modifications without prior notice.