# Solenoid valve 3/2 way N.C.
# Direct acting
# Explosion proof - Atex Ex d

**31LN2EIV20 ÷ 31LN2EIV30**

## PRESENTATION:

Direct acting S.V. for interception of fluids compatible with the construction materials. Aluminium coil housing, explosion proof "Ex d" . Electrical and electromechanical components according to Atex Directive 2014/34/EU.
Minimum operational pressure is not required.
The materials used and the tests carried out ensure maximum reliability and duration.

**USE:** Potentially explosive atmospheres
Zone 1, 2, 21, 22

**PIPES:** 1/4 NPT

**COIL:** 8W - Ø 13
BDV 180°C (class H)

Max. allowable pressure (PS) 40 bar
Housing ambient temperature - 40°C + 60°C

| Gaskets | Temperature | | Medium |
|---|---|---|---|
| **V**=FKM (fluoroelastomer) | - 10°C | + 80°C | Mineral oils (2°E), gasoline gas oil, fuel oils (7°E)) |
| **F**=H-NBR (hydrogenated nitrile) | - 30°C | + 80°C | Air, inert gas, water R 134a, R 404a |

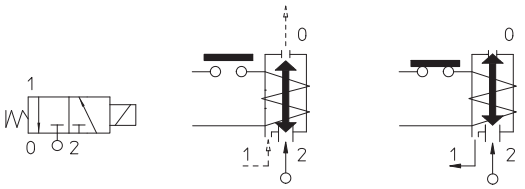


For seals other than FKM replace the letter "**V**" with the ones corresponding to the other seals. E.I. 31LN2EI***F***20.

| Pipe ANSI/ASME BI.20.1 | Code | Max viscosity | | Ø | Kv | Power | Pressure | | |
|---|---|---|---|---|---|---|---|---|---|
| | | | | | | | min | M.O.P.D. | |
| | | cSt | °E | mm | l/mn | watt | bar | AC bar | DC bar |
| 1/4 NPT | 31LN2EI***V***20 | 37 | ~ 5 | 2 | 2 | 8 | 0 | 10 | 10 |
| | 31LN2EI***V***30 | 53 | ~ 7 | 3 | 4 | | | 5 | 5 |

**According to Directive 2014/34/EU ATEX**

**II 2G Ex d IIC T6 o T5 Gb**
**II 2D Ex tb IIIC T80°C o T95°C Db IP67**

**Note**
* 3rd way exhaust= Ø 3 mm

The "ODE " reserves the right to carry out technical and aesthetic modifications without prior notice.

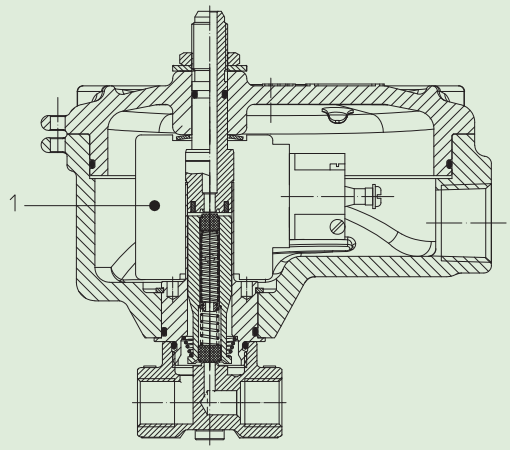


## MATERIALS:

| | |
|---|---|
| **Body** | Stainless steel AISI 316 |
| **Armature tube** | Stainless steel AISI series 300 |
| **Fixed core** | Stainless steel AISI series 400 |
| **Plunger** | Stainless steel AISI series 400 |
| **Phase displacement ring** | Gold plated copper |
| **Spring** | Stainless steel AISI series 300 |
| **Seal** | Standard: V=FKM<br>On request: F=H-NBR |
| **Orifice** | Stainless steel AISI 316 |
| **Coil housing:** | Die cast and passivated Aluminium |
| **Connector conformity** | ISO 4400 |

## FEATURES:

| | |
|---|---|
| **Electrical conformity** | IEC 335 |
| **Protection degree** | IP 67 EN 60529 (DIN 40050)<br>if installed with cable gland Atex Ex d IP67 or higher. |

## SPARE PARTS:

1. **Coil:**
   See coils list for Solenoid valves explosion proof Atex - Ex d

## ACCESSORIES:

Code P992219 Cable Gland (to be ordered separately)

## DIMENSIONS:

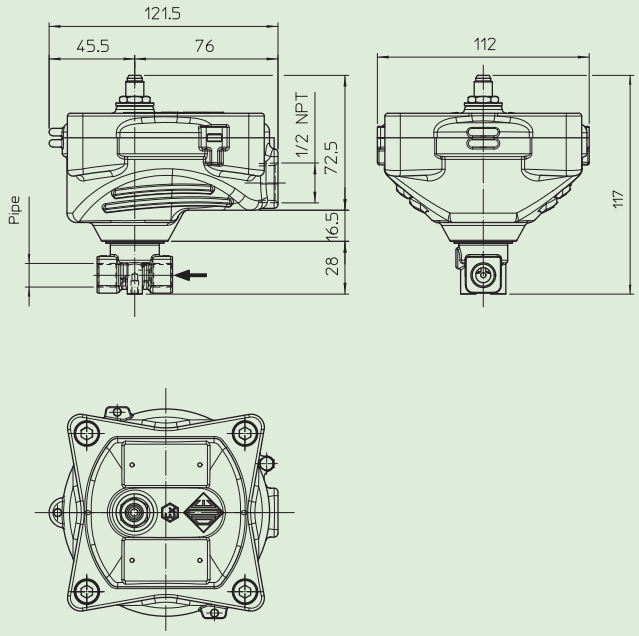


| COIL TYPE | POWER ABSORPTION | | |
|---|---|---|---|
| | W ⎓ | Hold VA ~ | Inrush VA ~ |
| B | 8 | 14,5 | 25 |

# Solenoid valve 3/2 way N.C.
# Direct acting
# equipped with kit and coil Ex mb

**31L2PDV30**

## PRESENTATION:

Direct acting S.V. for interception of fluids compatible with the construction materials.
Minimum operational pressure is not required.
The materials used and the tests carried out ensure maximum reliability and duration

**USE:** Potentially explosive atmospheres

**PIPE:** G 1/2 - G 1

**COILS:** Series TNA - Ø 14,5
(For characteristic see catalogue page)

Max. allowable pressure (PS) 25 bar
Ambient temperature:
See coils catalogue page for its compatibility.

| Gaskets | Temperature | | Medium |
|---|---|---|---|
| **V**=FKM (fluoroelastomer) | - 10°C | + 80°C | Mineral oils (2°E), gasoline gas oil, fuel oils (7°E) |

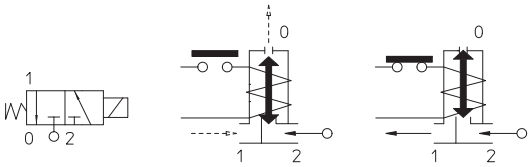


| Pipe ISO 228/1 | Code | Max viscosity | | Ø | Kv | Power | Pressure | | |
|---|---|---|---|---|---|---|---|---|---|
| | | | | | | | min | M.O.P.D. | |
| | | cSt | °E | mm | l/mn | watt | bar | AC bar | DC bar |
| G 1/4 | 31L2PD**V**30 | 53 | ~ 7 | 3* | 4 | (See TNA coils catalogue page) | 0 | 5 | 5 |

**According to Directive 2014/34/EU ATEX**

**II 2GD IIC T4**

**Note**
* 3rd way exhaust= Ø 2,5 mm

The "ODE " reserves the right to carry out technical and aesthetic modifications without prior notice.