Solenoid valve 3/2 way N.C.
Direct acting

31JN1W0*V*12
÷
31JN1W0*V*23

PRESENTATION:

Direct acting S.V. for interception of fluids compatible with the construction materials.
Minimum operational pressure is not required.
The materials used and the tests carried out ensure maximum reliability and duration.

USE: Automation
Heating

PIPES: G 1/8

COILS: 5W - Ø 10

LBA	155°C	(class F)
LBF - LBV	180°C	(class H)

MOULDING AND BOBBIN ARE MADE BY 100% VIRGIN MATERIAL.

Max. allowable pressure (PS)	40 bar
Ambient temperature:	
with coil class **F**	- 10°C + 60°C
with coil class **H**	- 10°C + 80°C

Gaskets	Temperature		Medium
V=FKM (fluoroelastomer)	- 10°C	+140°C	Mineral oils (2°E),gasoline gas oil, fuel oils (5°E)
B=NBR (nitrile rubber)	- 10°C	+ 90°C	Air, inert gas, water

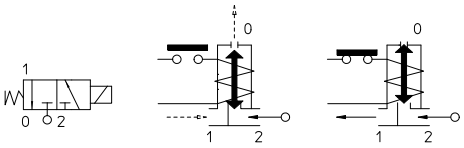

For seals other than FKM replace the letter "**V**" with the ones corresponding to the other seals. E.I. 31JN1W0**B**12.

Pipe ISO 228/1	Code	Max viscosity		Ø	Kv	Power	Pressure		
							min	M.O.P.D.	
		cSt	°E	mm	l/mn	(watt)	bar	AC bar	DC bar
G 1/8	31JN1W0**V**12	12	~ 2	1,2*	1	5	0	15	15
	31JN1W0**V**23	37	~ 5	2,3*	2,3			5	5

Note
* 3rd way exhaust= Ø 1,5 mm
Also available with brass body without lead.

The "ODE " reserves the right to carry out technical and aesthetic modifications without prior notification.

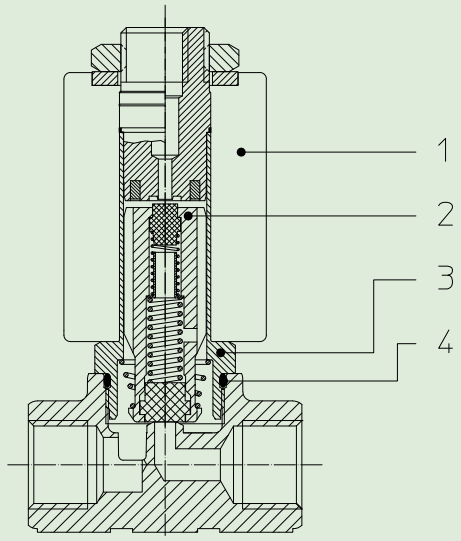

MATERIALS:

Body	Brass
Armature tube	Stainless steel AISI series 300
Fixed core	Stainless steel AISI series 400
Plunger	Stainless steel AISI series 400
Phase displacement ring	Copper - Cu 99,9%
Spring	Stainless steel AISI series 300
Seal	Standard: V=FKM On request: B=NBR
Orifice	Brass
On request:	
Connector	Pg 9 or Pg 11
Connector conformity	ISO 4400

FEATURES:

Electrical conformity	IEC 335
Protection degree	IP 65 EN 60529 (DIN 40050) with coil fitted by connector.

SPARE PARTS:

1. **Coil:**
   See coils list
2. **Complete plunger:**
   Code R452061/***V***
3. **Complete armature tube:**
   Code R452074
4. **Gasket O-Ring:**
   Code R990597/***V***

KIT:

KT100W0***V***25-FJ=***2+3+4***

DIMENSIONS:

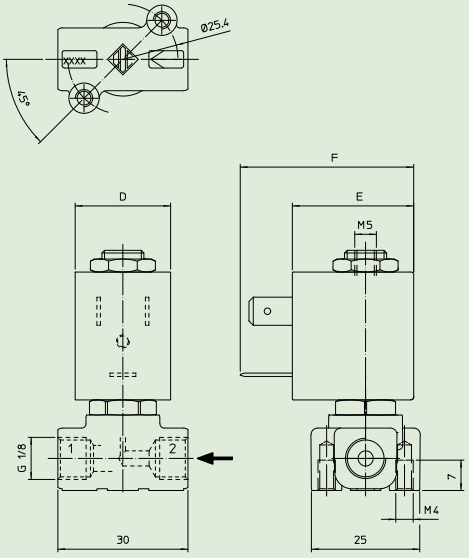

COIL TYPE	POWER ABSORPTION			DIMENSIONS		
	W ⎓	Hold VA ~	Inrush VA ~	D mm	E mm	F mm
L	5	10	15	22	27,5	39,5