Solenoid valve 3/2 way N.C.
Direct acting

31JN1X0V12 ÷ 31JN1X0V12-S

PRESENTATION:

Direct acting S.V. for interception of fluids compatible with the construction materials.
Minimum operational pressure is not required.
The materials used and the tests carried out ensure maximum reliability and duration.

USE: Automation
Heating

PIPES: G 1/8

COIL: 5W - Ø 10

LBA	155°C	(class F)
LBF - LBV	180°C	(class H)

COIL HOUSING AND COIL FORMER MATERIAL ARE MADE BY 100% VIRGIN MATERIAL.

Max. allowable pressure (PS) 40 bar
Ambient temperature:
See coils catalogue page for its compatibility.

Gaskets	Temperature		Medium
V=FKM (fluoroelastomer)	- 10°C	+140°C	Mineral oils (2°E),gasoline gas oil, fuel oils (5°E)

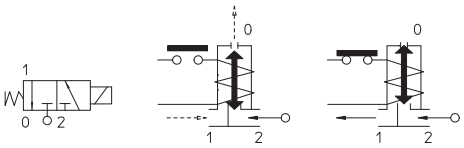

Pipe ISO 228/1	Code	Max viscosity		Ø	Kv	Power	Pressure		
							min	M.O.P.D.	
		cSt	°E	mm	l/mn	watt	bar	AC bar	DC bar
G 1/8	31JN1X0***V***12	12	~ 2	1,2*	1	5	0	15	-
	31JN1X0***V***12-S								15

Note
* 3rd way exhaust= Ø 1,7 mm
Available also with brass body without lead.
Available on request and with minimum quantities.

The "ODE " reserves the right to carry out technical and aesthetic modifications without prior notification.

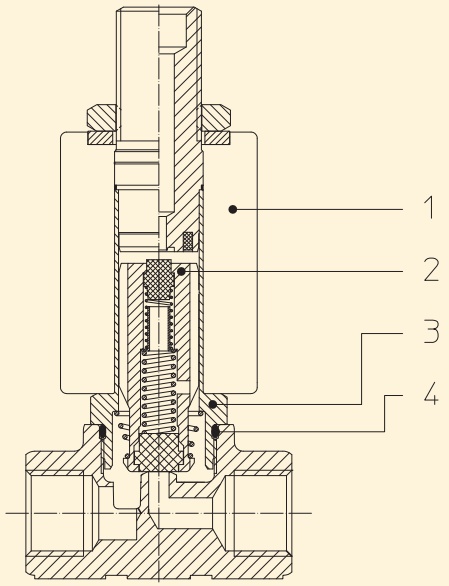

MATERIALS:

Body	Brass
Armature tube	Stainless steel AISI series 300
Fixed core	Stainless steel AISI series 400
Plunger	Stainless steel AISI series 400
Phase displacement ring	Copper - Cu 99,9%
Spring	Stainless steel AISI series 300
Seal	V=FKM
Orifice	Brass

On request:

Connector	Pg 9 or Pg 11
Connector conformity	ISO 4400

FEATURES:

Electrical conformity	IEC 335
Protection degree	IP 65 EN 60529 (DIN 40050) with coil fitted by connector.

SPARE PARTS:

1. **Coil:**
   See coils list
2. **Complete plunger:**
   Code R452061/***V***
3. **Complete armature tube :**
   Code R452198
4. **Gasket O-Ring:**
   Code R990597/***V***

DIMENSIONS:

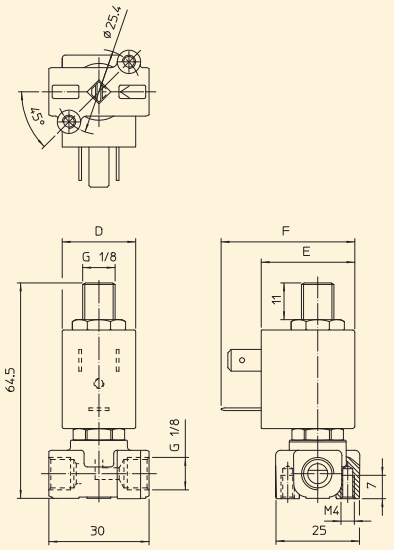

COIL TYPE	POWER ABSORPTION			DIMENSIONS		
	W ⎓	Hold VA ~	Inrush VA ~	D mm	E mm	F mm
L	5	10	15	22	27,5	39,5