Solenoid valve 2/2 way N.O.
Combined operation

21HT3Z0*Y*110
÷
21HT5Z0*Y*160

PRESENTATION:

Combined operation S.V. for interception of fluids compatibles with the construction materials.
Minimum operational pressure is not required.
The materials used and the tests carried out ensure maximum reliability and duration.

USE: Automation, Vacuum packaging
Heating

PIPES: G 3/8 - G 3/4

COIL: 8W - Ø 13

BDA	155°C	(class F)
BDV	180°C	(class H)

COIL HOUSING AND COIL FORMER MATERIAL ARE MADE BY 100% VIRGIN MATERIAL.

Max. allowable pressure (PS) 16 bar
Ambient temperature:
See coils catalogue page for its compatibility.

Gaskets	Temperature		Medium
Y=NBR + PA (nitrile rubber+polyamide)	- 10°C	+ 90°C	Air, gasolin, fuel oils, inert gas,
V=FKM +PA (fluoroelastomer+polyamide)	- 10°C	+140°C	Mineral oils (2°E), gasoline gas oil

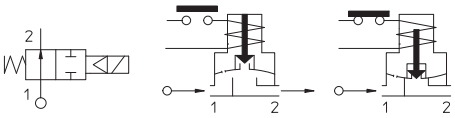

For seals other than NBR+PA replace the letter "**Y**" with the ones corresponding to the other seals. E.I. 21HT3Z0***V***110.

Pipe ISO 228/1	Code	Max viscosity		Ø	Kv	Power	Pressure		
							min	M.O.P.D.	
		cSt	°E	mm	l/mn	watt	bar	AC bar	DC bar
G 3/8	21HT3Z0**Y**110	12	~ 2	11	20	8	0	10	10
G 1/2	21HT4Z0**Y**160			16	40				
G 3/4	21HT5Z0**Y**160								

The "ODE " reserves the right to carry out technical and aesthetic modifications without prior notice.

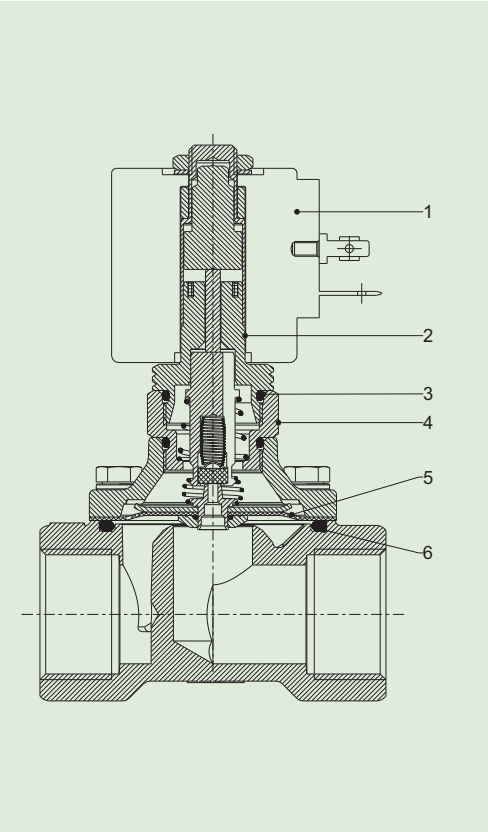

MATERIALS:

Body	Brass - UNI EN 12165 CW617N
Armature tube	Stainless steel AISI series 300
Fixed core	Stainless steel AISI series 400
Plunger	Stainless steel AISI series 400
Phase displacement ring	Copper - Cu 99,9%
Spring	Stainless steel AISI series 300
Seal	Standard: Y=NBR+PA On request: V=FKM+PA
Orifice	Brass - UNI EN 12165 CW617N

On request:

Connector	Pg 9 or Pg 11
Connector conformity	ISO 4400

FEATURES:

Electrical conformity	IEC 335
Protection degree	IP 65 EN 60529 (DIN 40050) with coil fitted by connector.

SPARE PARTS:

1. **Coil:**
   See coils list
2. **Complete armature tube without gasket:**
   Code R453459
3. **Gasket O-Ring:**
   Code R990000/***B***
4. **Complete nut with gasket O-Ring:**
   Code R452863/***B***
5. **Complete diaphragm with spring :**
   G 3/8 Code R452862/***B***
   G 1/2 ÷ G 3/4 Code R452879/***B***
6. **Gasekt O-Ring :**
   Code R990105/***G***

MAINTENANCE KIT:

G 3/8
KTGHT3Z0***Y***11=***5+6***
G 1/2÷ G 3/4
KTGHT4Z0***Y***16=***5+6***

DIMENSIONS:

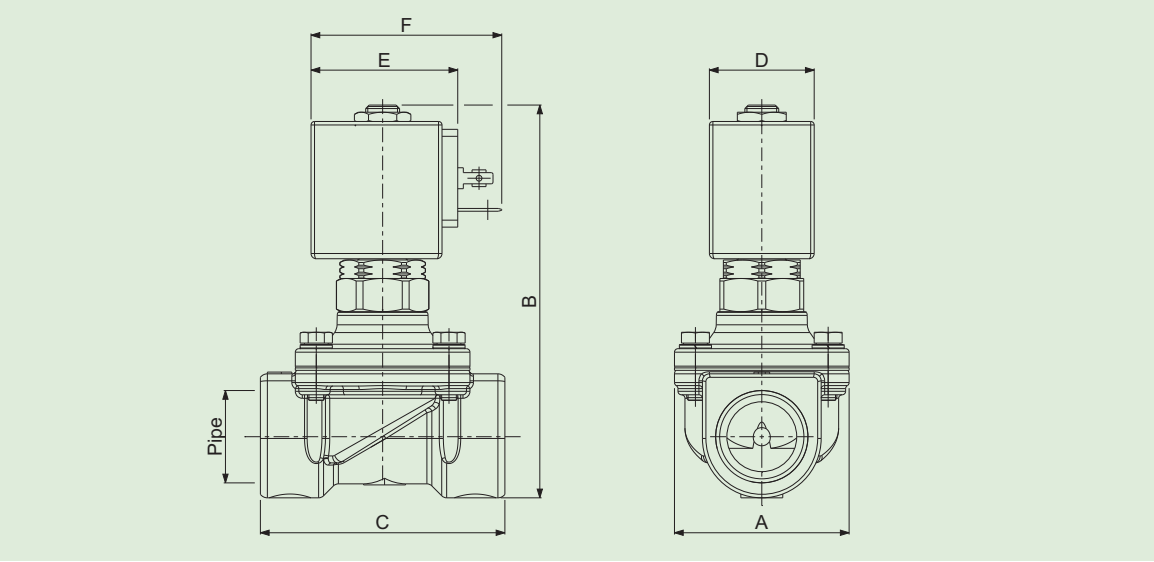

Type	Pipe ISO 228/1	A mm	B mm	C mm
21HT3Z0**Y**110	G 3/8	50	101	56
21HT4Z0**Y**160	G 1/2		112,5	70
21HT5Z0**Y**160	G 3/4			

COIL TYPE	POWER ABSORPTION			DIMENSIONS		
	W ⎓	Hold VA ~	Inrush VA ~	D mm	E mm	F mm
B	8	14,5	25	30	42	54