Solenoid valve 2/2 way N.C.
Direct acting - NSF Certified

21AP1K1*V*15-T0
÷
21AP1K1*V*30-T0

PRESENTATION:

Direct acting S.V. for interception of fluids compatible with the construction materials.
Minimum operational pressure is not required.
The materials used and the tests carried out ensure maximum reliability and duration.

USE: Vending

PIPES: G 1/8

COIL:

8W - Ø 13		
BDA - BSA	155°C	(class F)
BDV	180°C	(class H)
12W - Ø 13		
UDA	155°C	(class F)
UDV	180°C	(class H)

COIL HOUSING AND COIL FORMER MATERIAL ARE MADE BY 100% VIRGIN MATERIAL.

Ambient temperature:
See coils catalogue page for its compatibility.

Gaskets	Temperature		Medium
V=FKM (fluoroelastomer)	- 10°C	+140°C	Water, air, steam

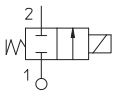

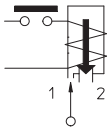

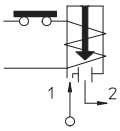

Max allowable pressure (PS) 16 bar - According to EN 60730-2-8 - Factor of safety for domestic applications equal to 5 times PS

Pipe ISO 228/1	Code	Max viscosity		Ø	Kv	Power	Pressure		
							min	M.O.P.D.	
		cSt	°E	mm	l/mn	watt	bar	AC bar	DC bar
G 1/8	21AP1K1*V*15-T0	12	~ 2	1,5	1,1	8	0	16	16
	21AP1K1*V*20-T0	37	~ 5	2	1,8				
	21AP1K1*V*25-T0	53	~ 7	2,5	2,5			14	9
						12		16	16
	21AP1K1*V*30-T0			3	3,4	8		10	6
						12		16	16

Max allowable pressure (PS) 25 bar - Safety factor for industrial application equal to 3 times PS | Please consult our Technical Service.

NSF
COMPONENT

Note
Max torque for fittings 1,5 Nm, coil nut assembly 2 Nm max; armature tube 10 Nm | Evaluate tightening torque for tapered fittings | Use the seal fittings compatible with the material of the body I Available with coil Ex nA | The use of rigid sealings (Ruby or PTFE) usually implies a slight leakage, limited within 2scc/min at the pressure of 1 bar | For application with steam or with PS above the 16 bar, please consult our Technical Service|Available on request and with minimum quantities.

The "ODE " reserves the right to carry out technical and aesthetic modifications without prior notice.

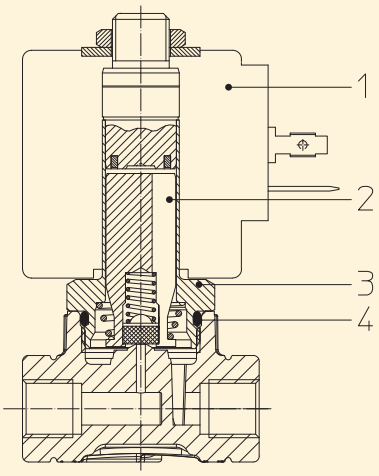

MATERIALS:

Body	PPS
Armature tube	Stainless steel AISI series 300
Fixed core	Stainless steel AISI series 400
Plunger	Stainless steel AISI series 400
Phase displacement ring	Gold plated copper
Spring	Stainless steel AISI series 300
Seal	V=FKM
Orifice	PPS

On request:

Connector	Pg 9 or Pg 11
Connector conformity	ISO 4400

FEATURES:

Electrical conformity	IEC 335
Protection degree	IP 65 EN 60529 (DIN 40050) with coil fitted by connector.

SPARE PARTS:

1. **Coil:**
   See coils list
2. **Complete plunger:**
   Code R450886/***VX***
3. **Complete armature tube:**
   Code R450603/D
4. **Gasket O-Ring:**
   Code R990000/**VX**

DIMENSIONS:

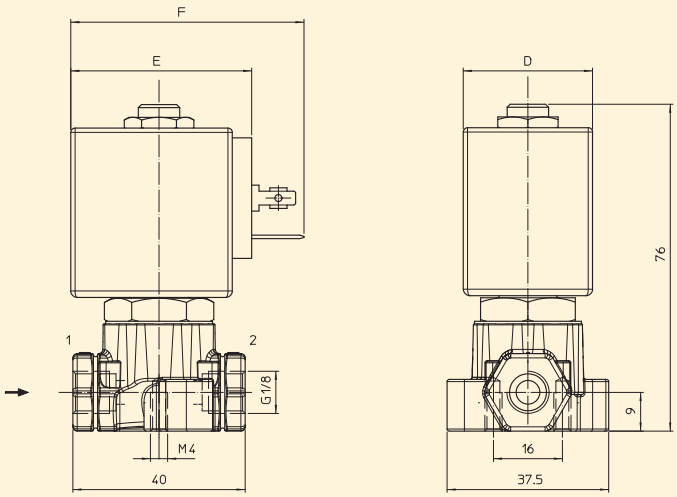

COIL TYPE	POWER ABSORPTION			DIMENSIONS		
	W ⎓	Hold VA ~	Inrush VA ~	D mm	E mm	F mm
B	8	14,5	25	30	42	54
U	12	23	35	36	48	60