ODE

Pressure reducer III° stage

R32D

PRESENTATION:

Aluminum pressure reducer suitable for the use with different types of fluids.
In the standard version the product is designed to operate with pressures up to 7 bar.
The control of the outlet pressure is realized by means of a diaphragm.
The connections are made by flanges screwed to the body.

USE:	Compressed air and gas
CONNECTIONS:	3/4" ÷ 1 1/2" (DIN and ANSI flanged connections available on request)

PRESSURE REDUCER FEATURES:

Inlet pressure	up to 7 bar
Outlet pressure	5 ÷ 1200 mbar
Kv nominal (UNI 60534-2)	1,44 m3/h (for outlet P 5-400 mbar) 8,4 m3/h (for outlet P 15-700 mbar|0,2-1,2 bar)
Operating temperature	- 20°C + 60°C
Shutter leakage class	class A (EN 12266-1)
Weight	~ 6,6 Kg (for outlet P 5-400 mbar) ~ 7,5 Kg (for outlet P 15-700 mbar | 0,2-1,2 bar)

The product is compliant with PED Directive 2014/68/UE

MATERIALS:

Body and bonnet	Aluminum
Internal parts	Aluminum | AISI 316L
Shutter spring	AISI 302
Adjusting spring (not in contact with the fluid)	C85
O-Ring and shutter gasket (different compounds available on request)	FPM
Diaphragm	NBR+PTFE

MAINTENANCE KIT:

KR32D repair kit available on request.
Kit contains: shutter assembly, O-ring and diaphragm assembly.

Note
Chemical compatibility fluids/materials, has to be verified at RFQ stage with ODE sales dept.

"ODE" reserves the right to carry out technical and aesthetic modifications without prior notice.

ORDERING CODE R32D

R	3	2	D	#	N	N	N	N	N	N	N	N	N	N	N	N

Model

Connections

Q	0	G 3/4 - F
R	0	G 1 - F
J	0	G 1 1/4 - F
S	0	G 1 1/2 - F
X	0	3/4 NPT - F
Y	0	1 NPT - F
B	0	1 1/4 NPT - F
Z	0	1 1/2 NPT - F
1	Z	SO ANSI 150 RF 1”
2	S	SO ANSI 300 RF 1"
1	5	SO ANSI 600 RF 1/2"
4	I	SO ANSI 600 RF 1 1/2"
5	W	SO ANSI 1500 RF 1”
0	R	EN1092-1/01B/DN20/PN40
0	S	EN1092-1/01B/DN25/PN40
1	M	EN1092-1/01B/DN25/PN63

Inlet pressure

I	0	7 bar

Outlet pressure

N	0	5 ÷ 45 mbar
J	0	10 ÷ 120 mbar
K	0	10 ÷ 400 mbar
T	1	15 ÷ 700 mbar
A	A	0,2 ÷ 1,2 bar

Seal

9	9	FPM
1	5	FPM use O_2
1	7	NBR for liquids
1	8	EPDM for liquids
1	9	FPM for liquids
9	7	NBR
9	8	EPDM

Certifications

R	0	CE
U	0	CE+Atex 2014/34/UE [1]
Y	0	CE+EAC TR CU 032/2013
V	0	CE+EAC TR CU 012/2011

[1] version certifiable on request

Accessories

0	0	-
0	4	Fixed calibration
0	5	Precalibrated
0	6	With pressure gauge
0	8	Degreased use O_2
1	6	O-Ring FDA compliance

standard versions

versions available on request

DIMENSIONS:

version with connections 3/4” ÷ 1"

Outlet pressure	H mm	H1 mm	H2 mm	H3 mm
5 - 400 mbar	~ 233	69	97	62
15 - 700 | 200 - 1200 mbar	~ 239	52,5	80,5	45,5

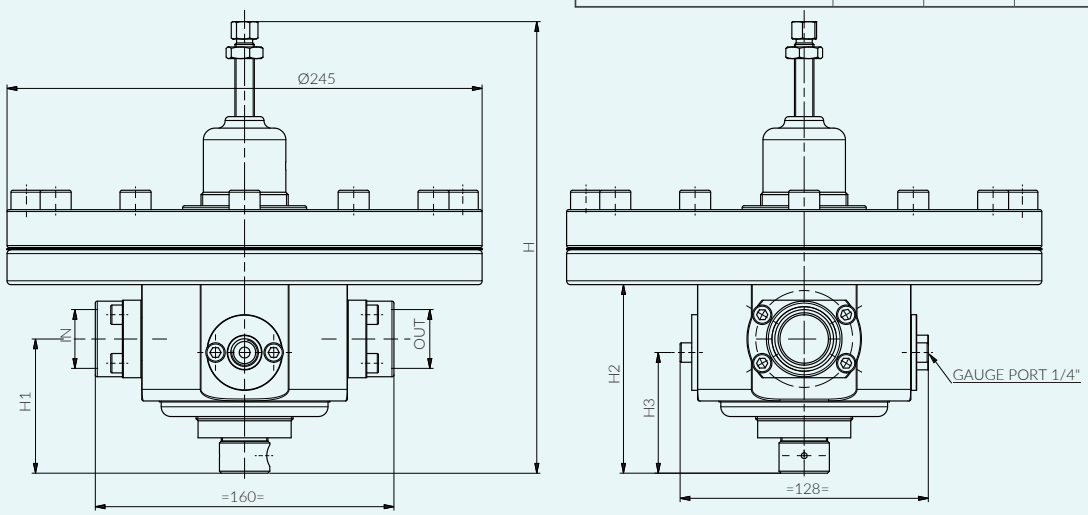

For other versions, please contact ODE Sales Office