Pneumatic piston actuated coaxial shuttle valve 2/2 N.C. | N.O. | double acting, pressure above seat

SERIE 21SH1
(NPT Threaded Connection)

PRESENTATION:

- High flow rate with reduced pressure losses due to optimized internal flow path.
- Compact design, fast acting
- Stainless steel body, corrosion resistant.
- Mounting position freely selectable.
- Suitable for low vacuum (L.V. 150 mmHg)
- Flow path: Unidirectional

USE:

Fluids, gases, vapours (neutral, aggressive)

NOMINAL SIZE:

DN10-DN50

VALVE FEATURES:

Fluid Temperature	FKM - 20°C + 150°C EPDM - 20°C + 130°C
Ambient temperature	- 20°C + 80°C
Fluid viscosity	max 500 cSt
Body	AISI 316 (on request AISI 304)
Seating seal	FKM,EPDM (*)
Lip seal	FKM, EPDM (*)

ACTUATOR FEATURES:

Pilot fluid	Air, inert gases
Fluid Temperature	max + 80°C
Piston seal	FKM

(*) **Gaskets**
V=FKM (fluoroelastomer)
E=EPDM (ethylene-propylene)

For seals other than FKM replace the letter "**V**" with the ones corresponding to the other seals.
E.I. 21SH11A**E**10BP.

CE Approval
(Pressure Equipment Directive 2014/68/EU)
for Valve 21SH1..032 ÷ ..050..

Nota
Chemical compatibility fluids/materials, has to be verified at RFQ stage with ODE sales dept.

The "ODE " reserves the right to carry out technical and aesthetic modifications without prior notice.

Pipe ANSI/ASME BI.20.1	Code	Ø mm	Kv	Actuator pilot pressure (bar)		Differential pressure (bar)		Max. allowable pressure
			l/mn	min	max	min	max	PS (bar)
N.C.								
3/8 NPT	21SH11AV010NT	10	21	3	8	0	16	16
1/2 NPT	21SH11AV015NT	15	43	3	8	0	16	16
3/4 NPT	21SH11AV020NT	20	89	4	8	0	16	16
1 NPT	21SH11AV025NT	25	206	3	8	0	16	16
1 1/4 NPT	21SH11AV032NT	32	274	3	8	0	16	16
1 1/2 NPT	21SH11AV040NT	40	334	3	8	0	16	16
2 NPT	21SH11AV050NT	50	444	4,5	8	0	16	16
N.O.								
3/8 NPT	21SH10AV010NT	10	21	3	8	0	16	16
1/2 NPT	21SH10AV015NT	15	43	3	8	0	16	16
3/4 NPT	21SH10AV020NT	20	89	4	8	0	16	16
1 NPT	21SH10AV025NT	25	206	3	8	0	16	16
1 1/4 NPT	21SH10AV032NT	32	274	3	8	0	16	16
1 1/2 NPT	21SH10AV040NT	40	334	3	8	0	16	16
2 NPT	21SH10AV050NT	50	444	4,5	8	0	16	16
Double acting with spring (N.C.)								
3/8 NPT	21SH12AV010NT	10	21	3	8	0	16	16
1/2 NPT	21SH12AV015NT	15	43	3	8	0	16	16
3/4 NPT	21SH12AV020NT	20	89	4	8	0	16	16
1 NPT	21SH12AV025NT	25	206	3	8	0	16	16
1 1/4 NPT	21SH12AV032NT	32	274	3	8	0	16	16
1 1/2 NPT	21SH12AV040NT	40	334	3	8	0	16	16
2 NPT	21SH12AV050NT	50	444	4,5	8	0	16	16
Double acting								
3/8 NPT	21SH13AV010NT	10	21	3	8	0	16	16
1/2 NPT	21SH13AV015NT	15	43	3	8	0	16	16
3/4 NPT	21SH13AV020NT	20	89	4	8	0	16	16
1 NPT	21SH13AV025NT	25	206	3	8	0	16	16
1 1/4 NPT	21SH13AV032NT	32	274	3	8	0	16	16
1 1/2 NPT	21SH13AV040NT	40	334	3	8	0	16	16
2 NPT	21SH13AV050NT	50	444	4,5	8	0	16	16

ORDERING CODE

21	SH1	1	A	V	010	NT

PROCESS CONNECTION:

- **BP** BSP
- **BT** BSPT
- **NT** NPT

PILOT FUNCTION:

- **0** N.O.
- **1** N.C.
- **2** Double acting with spring
- **3** Double acting

NOMINAL DIAMETER:

010
015
020
025
032
040
050

SEATING SEAL:

- **E** EPDM
- **V** FKM

BODY MATERIAL:

- **A** AISI 316
- **B** AISI 304

SERIE

2 WAY 1 ELEMENT

Type	Pipe ANSI/ASME BI.20.1	A mm	B mm	D mm	L mm	SW	Weight Kg
N.C.							
21SH11AV010NT	3/8 NPT	56	33	46	98	22	0,8
21SH11AV015NT	1/2 NPT	61	35	52	112	26,5	1
21SH11AV020NT	3/4 NPT	72	40	64	135	32	1,5
21SH11AV025NT	1 NPT	78	43	69	143	41	1,92
21SH11AV032NT	1 1/4 NPT	94	51	86	165	50	3,06
21SH11AV040NT	1 1/2 NPT	104	56	96	180	56	3,76
21SH11AV050NT	2 NPT	116	62	108	207	70	5,71
N.O.							
21SH10AV010NT	3/8 NPT	56	33	46	98	22	0,8
21SH10AV015NT	1/2 NPT	61	35	52	112	26,5	1
21SH10AV020NT	3/4 NPT	72	40	64	135	32	1,5
21SH10AV025NT	1 NPT	78	43	69	143	41	1,92
21SH10AV032NT	1 1/4 NPT	94	51	86	165	50	3,06
21SH10AV040NT	1 1/2 NPT	104	56	96	180	56	3,76
21SH10AV050NT	2 NPT	116	62	108	207	70	5,71
Double effect with spring (N.C.)							
21SH12AV010NT	3/8 NPT	56	33	46	98	22	0,8
21SH12AV015NT	1/2 NPT	61	35	52	112	26,5	1
21SH12AV020NT	3/4 NPT	72	40	64	135	32	1,5
21SH12AV025NT	1 NPT	78	43	69	143	41	1,92
21SH12AV032NT	1 1/4 NPT	94	51	86	165	50	3,06
21SH12AV040NT	1 1/2 NPT	104	56	96	180	56	3,76
21SH12AV050NT	2 NPT	116	62	108	207	70	5,71
Double effect							
21SH13AV010NT	3/8 NPT	56	33	46	98	22	0,8
21SH13AV015NT	1/2 NPT	61	35	52	112	26,5	1
21SH13AV020NT	3/4 NPT	72	40	64	135	32	1,5
21SH13AV025NT	1 NPT	78	43	69	143	41	1,92
21SH13AV032NT	1 1/4 NPT	94	51	86	165	50	3,06
21SH13AV040NT	1 1/2 NPT	104	56	96	180	56	3,76
21SH13AV050NT	2 NPT	116	62	108	207	70	5,71
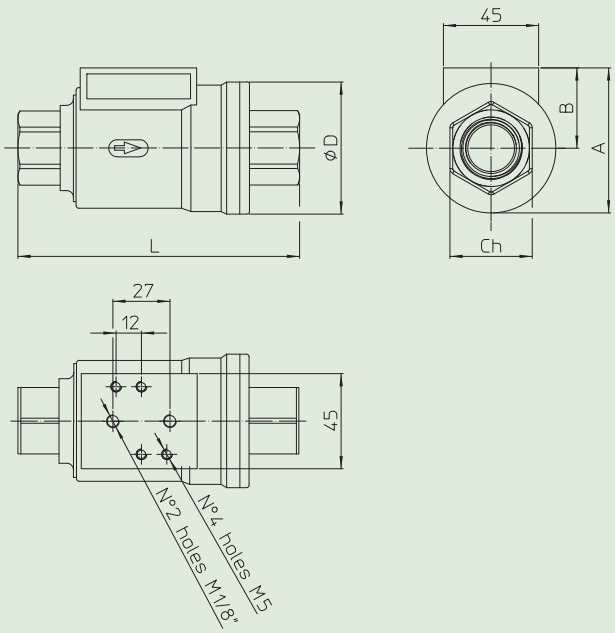
DIMENSIONS: